SERAPID
RIGID CHAIN TECHNOLOGY

QUICK DIE XCHANGE QDX

080-03-EN

Escaping arc clamp **TBHS**

Shock resistant clamp with a curved motion
20-630 kN | 8 models

Specifications

- Escaping arc shape, clamping wedge moving in and out on a curving path
- Horizontal clamping surface
- Vertical clamping force, without a radial load (force component)
- Shock resistant
- Mechanical locking holds the die without pressure drops
- Patented clamp
- Standard working temperature of up to 70 °C, 160 °C with Viton seals

☑static ☐removable ☑bolster ☑ram ☐hydraulic single-acting ☑hydraulic double-acting ☐mechanical ☑automatic

TBHS escaping arc clamps are used on bolsters or rams and clamp the die on the side. The clamping surface is horizontal. The arc shape of the wedge allows to move in and out on a curved path. As a result, the clamping force is vertical and jamming in high temperature situations is eliminated. The clamp is therefore also suitable for intensive load applications such as thermoforming.

The range of models is extensive and has clamps of a force that can reach 630 kN.

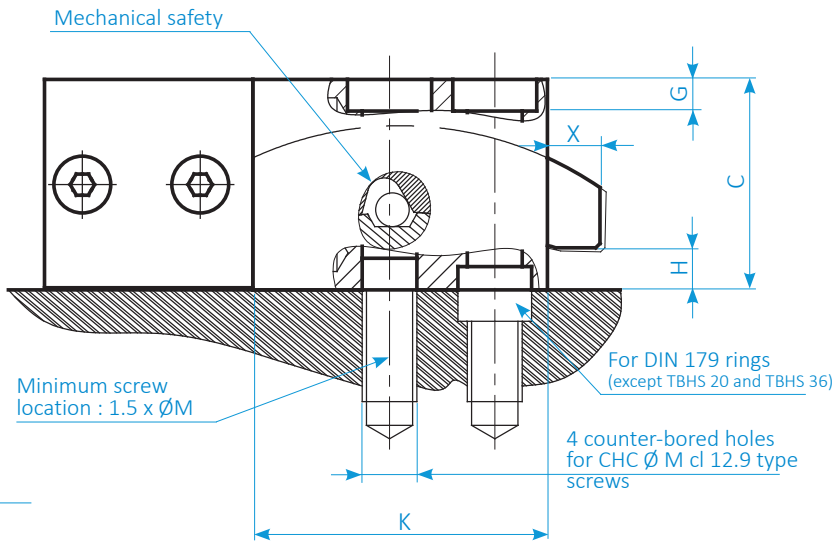

Detection

REAR DET : all models except TBHS 20 and 36

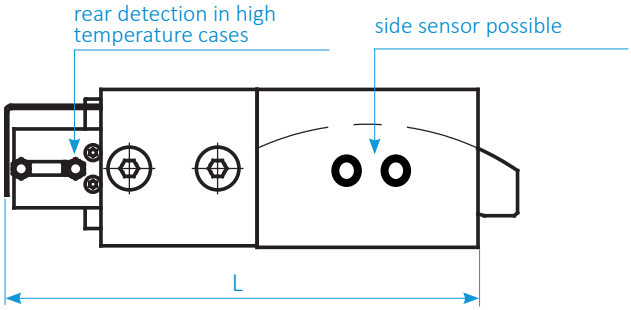

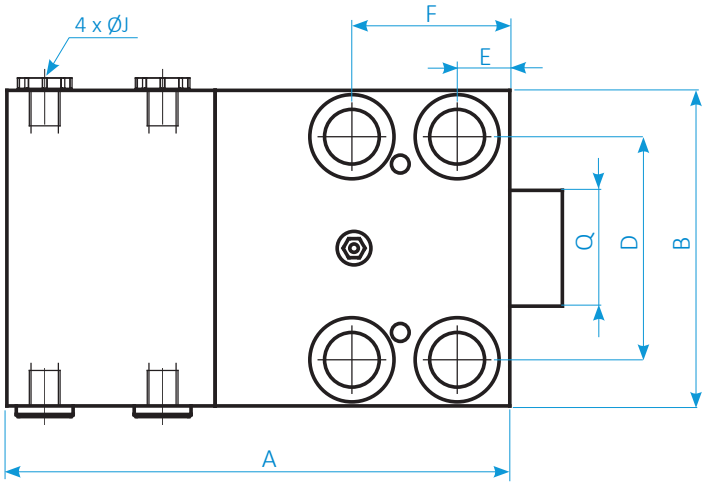

Options

- 2 side or rear inductive sensors (DET AR) for position checking.
- Adapter block for standard heights.
- Clamping surface sloped at 20° (different force than the standard), alternative solution to TBH.
- Viton gaskets for high temperatures up to 160°.
- Hydraulic connection UNF 9/ 16" (see table).

SERAPID
RIGID CHAIN TECHNOLOGY

QUICK DIE XCHANGE QDX

080-03-EN

Escaping arc clamp **TBHS**

Shock resistant clamp with a curved motion
20-630 kN | 8 models

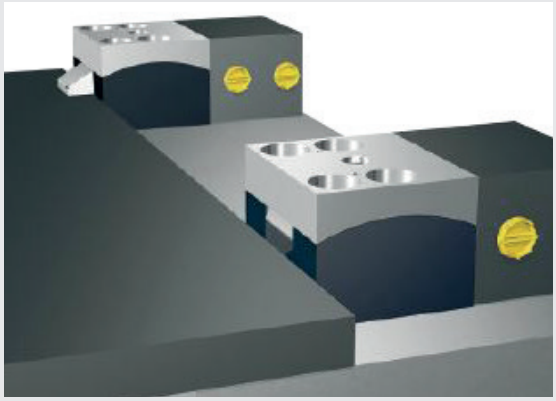

Specifications and dimensions

	TBHS 20	TBHS 36	TBHS 60	TBHS 100	TBHS 160	TBHS 250	TBHS 400	TBHS 630
clamping force (kN)	20	36	60	100	160	250	400	630
permanent retention force screw property class 12.9 kN	35	60	90	170	300	440	480	830
weight (kg)	1,95	3,75	7,5	12,8	23	44	84	120
oil volume (cm^3)	15	26,2	32	57	155	200	494.5	780
max flow rate (l/min)	0,9	1.5	2,1	3,3	5,5	8,4	15.4	24,5
max. working pressure (bar)	200	200	200	200	200	200	200	200
A	106	133	161	189	239	290	325	395
B	63	80	98	120	150	198	240	280
C	45	56	66	80	100	128	160	190
D	43	55	65	85	106	140	180	210
E	10	12,5	16	20	25	26	32	38
F	30	37,5	46	58	75	78	95	108
G	7	9	10	20	25	30	36	44
M	M10	M12	M16	M20	M24	M30	M36	M42
J	2 X G1/8" 2 x UNF 7/16"	2 X G1/4" 2 x UNF 9/16"	G1/4" UNF 9/16"	G1/4" UNF 9/16"	G1/2" UNF 7/8"	G1/2" UNF 7/8"	G1/2" UNF 7/8"	G1/2" UNF 7/8"
K	56	70	84	100	140	160	180	220
H	16	20	20	20	20	20	40	50
X	16	20	20	20	25	25	30	38
L	-	-	218	246	300	360	428	498
Q	25	32	38	48	55	75	100	120

All dimensions are in millimetres.

Purchase order reference

TBHS - xx - DET or DET AR - Z - V - S

- S: for specific dimensions (please attach a drawing)
- V: Viton seals
- Z: hydraulic connection dimension
- DET AR: rear detection
- DET: side detection
- xx: clamping force in (kN)

Examples : TBHS 100 - DET AR - G1/4"- V
TBHS 400 - DET - UNF7/8"

SERAPID France
+33 (0)2 32 06 35 60
info-fr@serapid.com

SERAPID Deutschland GmbH
+49 (0)7931 96 47-0
info-de@serapid.com

SERAPID Ltd
+44 (0)1359 233335
info-uk@serapid.com

SERAPID INC.
+1 586 274 0774
info-us@serapid.com

SERAPID China Office | +86 185 1215 0303 | info-cn@serapid.com • SERAPID Italy Office | +39 01 18 00 35 44 | info-it@serapid.com
SERAPID Mexico Office / LATAM | +52 1 442 4 900 701 | info-mx@serapid.com

SERAPID | REF FT_080_03_TBHS_EN | V2 | 02 2017 | The trademarks and product names used are the property of their owners.
We decline any liability for errors and omissions | We reserve the right to modify our existing products without notice.